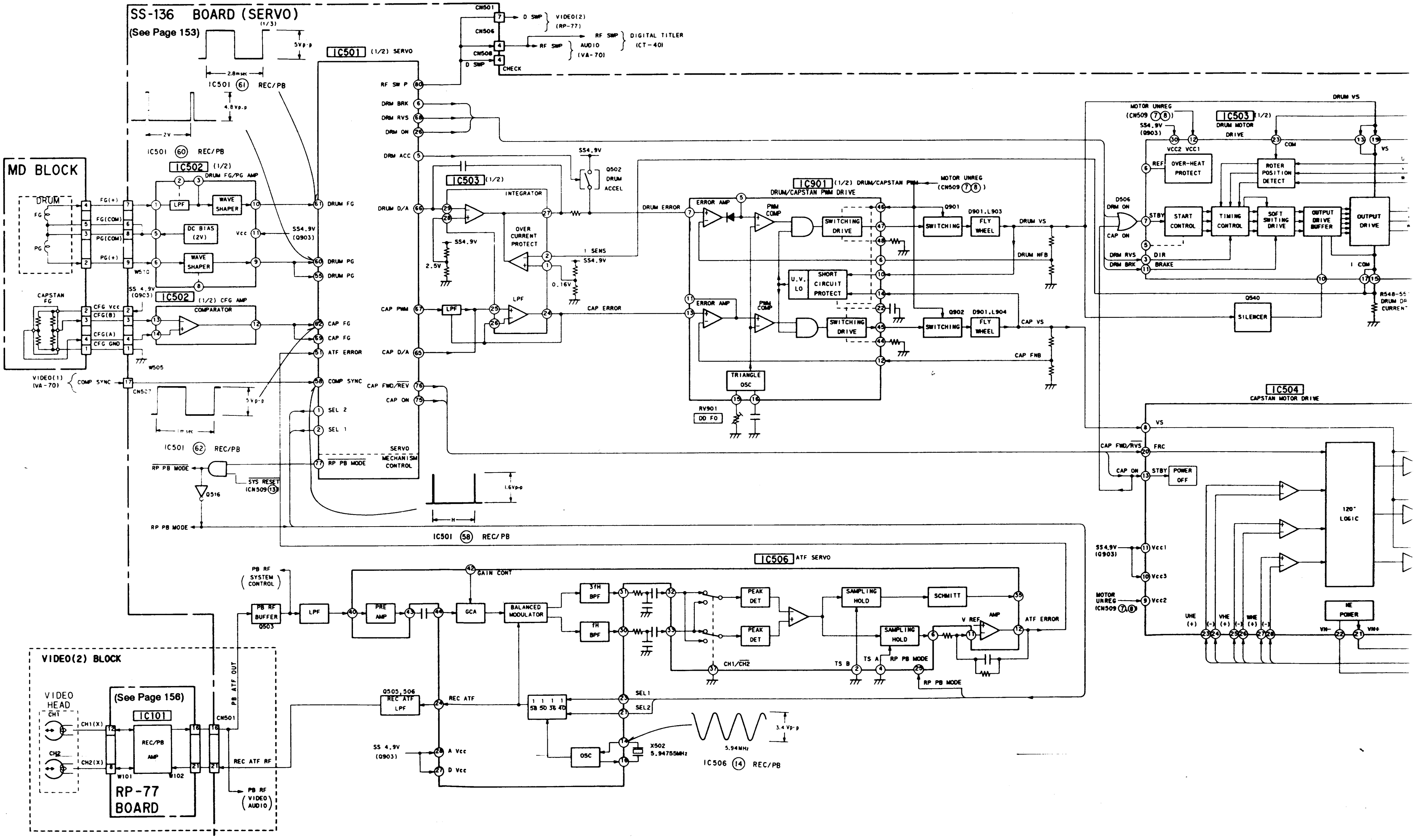
SS-136 BOARD (SERVO) (1/3)
(See Page 153)
MD BLOCK
DRUM
FG
PG
CAPSTAN FG
FG(+)
FG(COM)
PG(COM)
PG(+)
CFG Vcc
CFG(B)
CFG(A)
CFG GND
W505
W510
VIDEO(1) (VA-70)
COMP SYNC
CN507
IC501 (61) REC/PB
2.8msec
5Vp-p
4.8Vp-p
2V
IC501 (60) REC/PB
IC502 (1/2) DRUM FG/PG AMP
LPF
WAVE SHAPER
DC BIAS (2V)
Vcc
SS4.9V (Q903)
IC502 (1/2) CFG AMP
COMPARATOR
SS 4.9V (Q903)
1msec
IC501 (62) REC/PB
RP PB MODE
SYS RESET (CN509 (13))
Q516
IC501 (1/2) SERVO
RF SW P
DRM BRK
DRM RVS
DRM ON
DRM ACC
DRUM FG
DRUM PG
CAP FG
ATF ERROR
COMP SYNC
SEL 2
SEL 1
SERVO MECHANISM CONTROL
DRUM D/A
CAP PWM
CAP D/A
CAP FWD/REV
CAP ON
IC501 (58) REC/PB
H
1.6Vp-p
CN501
CN506
CN508
D SWP
RF SWP
CHECK
VIDEO(2) (RP-77)
AUDIO (VA-70)
DIGITAL TITLER (CT-40)
IC503 (1/2)
INTEGRATOR
OVER CURRENT PROTECT
LPF
2.5V
0.16V
I SENS
SS4.9V
Q502 DRUM ACCEL
DRUM ERROR
CAP ERROR
IC901 (1/2) DRUM/CAPSTAN PWM DRIVE
ERROR AMP
PWM COMP
SWITCHING DRIVE
U.V. LO
SHORT CIRCUIT PROTECT
TRIANGLE OSC
RV901 DD FO
MOTOR UNREG (CN509 (7)(8))
Q901
Q902
SWITCHING
FLY WHEEL
D901, L903
D901, L904
DRUM VS
DRUM NFB
CAP VS
CAP FNB
IC503 (1/2) DRUM MOTOR DRIVE
MOTOR UNREG (CN509 (7)(8))
SS4.9V (Q903)
VCC2 VCC1
REF
OVER-HEAT PROTECT
D506 DRM ON
CAP ON
STBY
START CONTROL
TIMING CONTROL
SOFT SWITING DRIVE
OUTPUT DRIVE BUFFER
OUTPUT DRIVE
ROTER POSITION DETECT
COM
VS
DIR
BRAKE
DRM RVS
DRM BRK
I COM
Q540 SILENCER
R548-55 DRUM DR CURREN
IC504 CAPSTAN MOTOR DRIVE
VS
FRC
CAP FWD/RVS
STBY
POWER OFF
Vcc1
Vcc3
Vcc2
MOTOR UNREG (CN509 (7)(8))
UHE (+) (-)
VHE (+) (-)
WHE (+) (-)
120° LOGIC
HE POWER
VH-
VH+
IC506 ATF SERVO
PB RF (SYSTEM CONTROL)
PB RF BUFFER Q503
LPF
PRE AMP
GCA
GAIN CONT
BALANCED MODULATOR
3fH BPF
fH BPF
PEAK DET
SAMPLING HOLD
SCHMITT
V REF
AMP
ATF ERROR
CH1/CH2
TS B
TS A
RP PB MODE
Q505, 506 REC ATF LPF
REC ATF
SS 4.9V (Q903)
A Vcc
D Vcc
1/58 1/50 1/36 1/40
OSC
SEL1
SEL2
X502 5.94755MHz
5.94MHz
3.4Vp-p
IC506 (14) REC/PB
VIDEO(2) BLOCK
VIDEO HEAD
CH1
CH2
CH1(X)
CH2(X)
(See Page 156)
IC101
REC/PB AMP
W101
W102
RP-77 BOARD
CN501
PB ATF OUT
REC ATF RF
PB RF (VIDEO AUDIO)

09

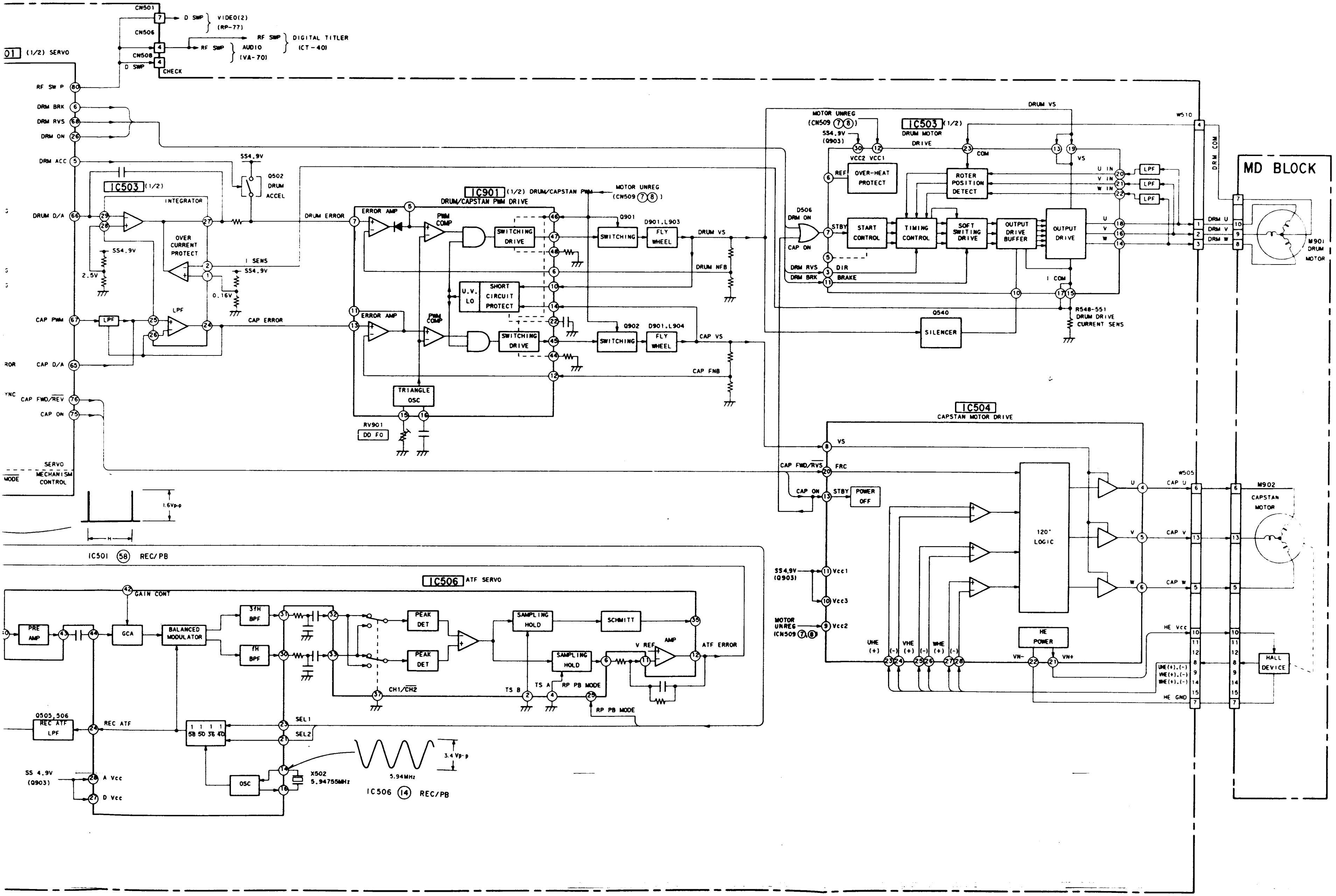
(1/2) SERVO
RF SW P
DRM BRK
DRM RVS
DRM ON
DRM ACC
DRUM D/A
CAP PWM
CAP D/A
CAP FWD/REV
CAP ON
SERVO MECHANISM CONTROL
MODE
CN501
CN506
CN508
D SWP
VIDEO(2) (RP-77)
RF SWP
DIGITAL TITLER (CT-40)
AUDIO (VA-70)
CHECK
IC503 (1/2)
INTEGRATOR
OVER CURRENT PROTECT
SS4.9V
2.5V
0.16V
I SENS
LPF
CAP ERROR
Q502 DRUM ACCEL
DRUM ERROR
IC901 (1/2) DRUM/CAPSTAN PWM
DRUM/CAPSTAN PWM DRIVE
ERROR AMP
PWM COMP
SWITCHING DRIVE
U.V. LO
SHORT CIRCUIT PROTECT
TRIANGLE OSC
RV901
DD FO
MOTOR UNREG (CN509 ⑦⑧)
Q901
Q902
SWITCHING
D901,L903
D901,L904
FLY WHEEL
DRUM VS
DRUM NFB
CAP VS
CAP FNB
1.6Vp-p
H
IC501 (58) REC/PB
IC506 ATF SERVO
GAIN CONT
PRE AMP
GCA
BALANCED MODULATOR
3TH BPF
fH BPF
PEAK DET
SAMPLING HOLD
SCHMITT
AMP
V REF
ATF ERROR
CH1/CH2
TS B
TS A
RP PB MODE
Q505,506 REC ATF LPF
REC ATF
1 1 1 1
58 50 36 4D
SEL1
SEL2
OSC
SS 4.9V (Q903)
A Vcc
D Vcc
X502 5.94755MHz
5.94MHz
3.4Vp-p
IC506 (14) REC/PB
IC503 (1/2) DRUM MOTOR DRIVE
MOTOR UNREG (CN509 ⑦⑧)
SS4.9V (Q903)
VCC2 VCC1
REF
OVER-HEAT PROTECT
COM
ROTER POSITION DETECT
D506
DRM ON
CAP ON
STBY
START CONTROL
TIMING CONTROL
SOFT SWITING DRIVE
OUTPUT DRIVE BUFFER
OUTPUT DRIVE
DIR
BRAKE
DRM RVS
DRM BRK
I COM
VS
U IN
V IN
W IN
U
V
W
Q540
SILENCER
R548-551 DRUM DRIVE CURRENT SENS
W510
DRM COM
DRM U
DRM V
DRM W
MD BLOCK
M901 DRUM MOTOR
IC504 CAPSTAN MOTOR DRIVE
CAP FWD/RVS
FRC
STBY
POWER OFF
SS4.9V (Q903)
Vcc1
Vcc3
MOTOR UNREG (CN509 ⑦⑧)
Vcc2
UHE (+) (-)
VHE (+) (-)
WHE (+) (-)
120° LOGIC
HE POWER
VH-
VH+
W505
CAP U
CAP V
CAP W
HE Vcc
UHE(+),(-)
VHE(+),(-)
WHE(+),(-)
HE GND
M902 CAPSTAN MOTOR
HALL DEVICE